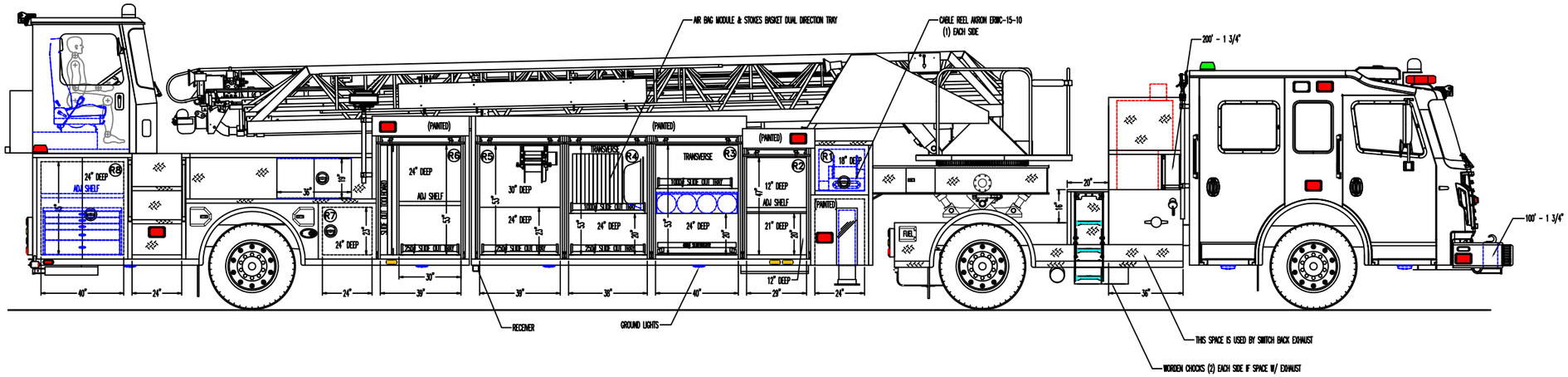

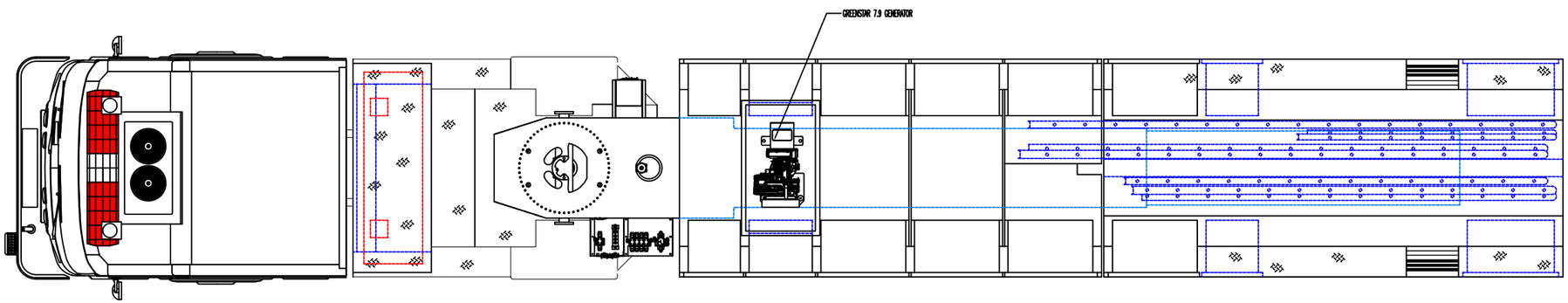

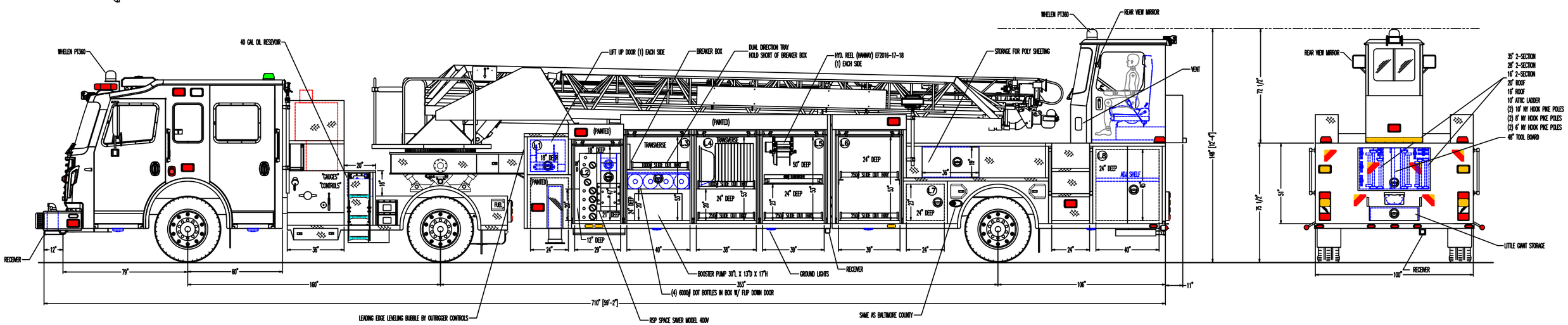

NOTES:
1. OVERALL HEIGHT IS IN LOADED CONDITION. UNLOADED HEIGHTS MAY BE 4" ABOVE HEIGHTS SHOWN.
2. DO NOT SCALE DRAWING.
3. ALL DIMENSIONS ARE APPROXIMATE AND SUBJECT TO ENGINEERING CHANGES.
4. DRAWING MAY OR MAY NOT SHOW ALL ITEMS AS DESCRIBED IN THE WRITTEN DETAIL SPECIFICATIONS.
5. INCLUSION OF AN ITEM ON THE DRAWING DOES NOT CONSTITUTE INCLUSION OF THAT ITEM WITH THE FINAL DELIVERED UNIT.

REVISED: CRL	DATE: 05/15/2015 (R-07)
REVISED: CRL	DATE: 01/07/2015 (R-06)
REVISED: JPF	DATE: 11/14/2014 (R-05)
DRAWN: JRL	DATE: 04/25/2014 (P5439-01)

PROPRIETARY AND CONFIDENTIAL
THE INFORMATION CONTAINED IN THIS DRAWING IS THE SOLE PROPERTY OF ROSENBAUER. ANY REPRODUCTION IN PART OR AS A WHOLE WITHOUT THE WRITTEN PERMISSION OF ROSENBAUER IS PROHIBITED.

APPROVED BY:

MAXIMUM HEIGHT	N/A
MAXIMUM LENGTH	N/A
BODY WIDTH	100"

CHASSIS: ROSENBAUER R608
PUMP: HALE AP 500 GPM PTO
TANK: POLY 300 WATER / 15 FOAM
TYPE: TILLER
AERIAL: N/A

-PROPOSED-
CHINO VALLEY

rosenbauer

ROSENBAUER EXT

DRAWING NUMBER P5496 REV 07